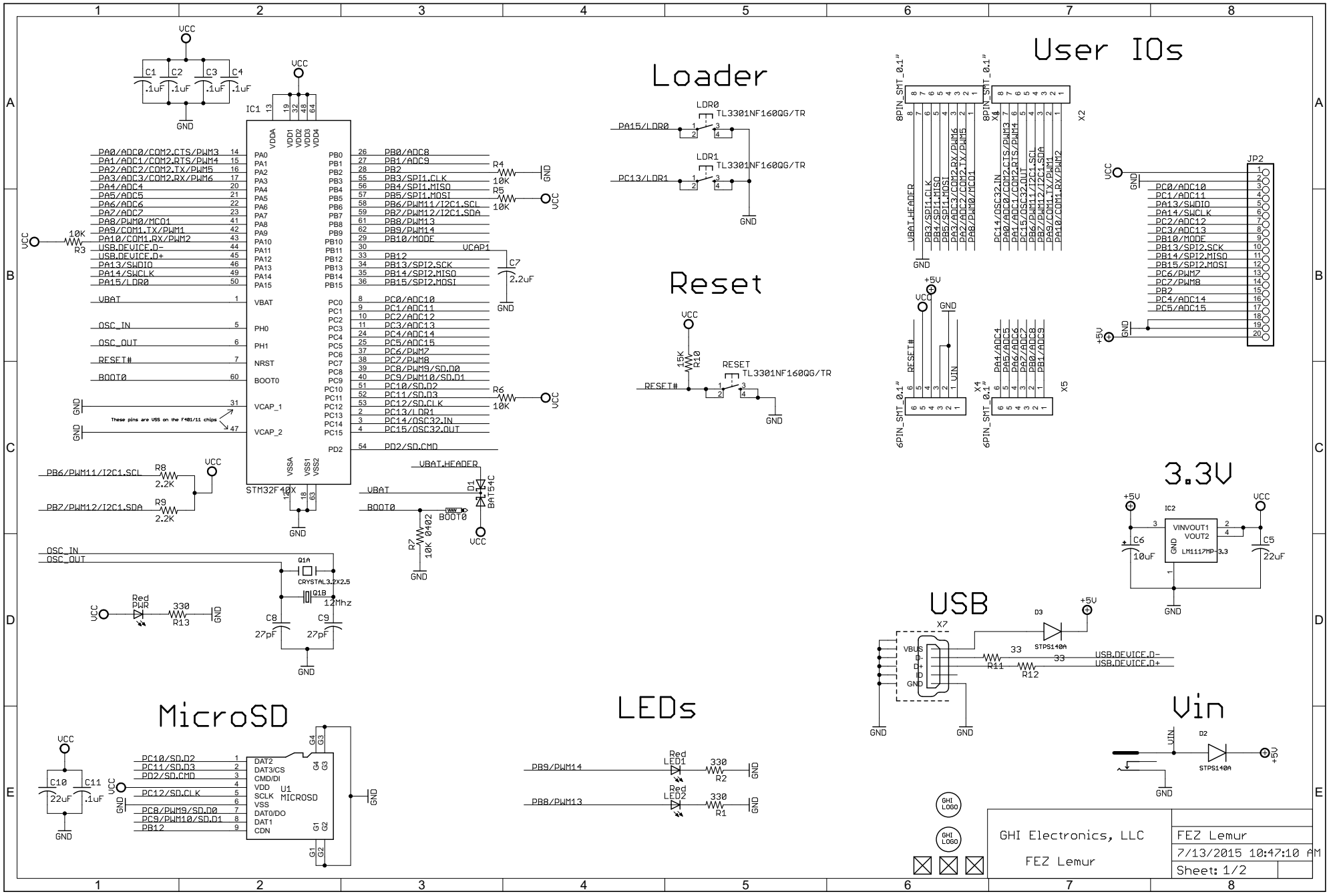

Loader
Reset
User IOs
3.3V
USB
Vin
MicroSD
LEDs
IC1
STM32F40X
IC2
LM1117MP-3.3
U1
MICROSD
LDR0
LDR1
TL3301NF160QG/TR
RESET
JP2
X1
X2
X4
X5
X7
D1
BAT54C
D2
D3
STPS140A
Q1A
CRYSTAL3.2X2.5
Q1B
12Mhz
Red
PWR
Red
LED1
Red
LED2
8PIN_SMT_0.1"
6PIN_SMT_0.1"
VBAT.HEADER
VBAT
BOOT0
VCAP1
VCAP_1
VCAP_2
VSSA
VSS1
VSS2
VDDA
VDD1
VDD2
VDD3
VDD4
PA0/ADC0/COM2.CTS/PWM3
PA1/ADC1/COM2.RTS/PWM4
PA2/ADC2/COM2.TX/PWM5
PA3/ADC3/COM2.RX/PWM6
PA4/ADC4
PA5/ADC5
PA6/ADC6
PA7/ADC7
PA8/PWM0/MCO1
PA9/COM1.TX/PWM1
PA10/COM1.RX/PWM2
USB.DEVICE.D-
USB.DEVICE.D+
PA13/SWDIO
PA14/SWCLK
PA15/LDR0
VBAT
OSC_IN
OSC_OUT
RESET#
BOOT0
PB0/ADC8
PB1/ADC9
PB2
PB3/SPI1.CLK
PB4/SPI1.MISO
PB5/SPI1.MOSI
PB6/PWM11/I2C1.SCL
PB7/PWM12/I2C1.SDA
PB8/PWM13
PB9/PWM14
PB10/MODE
PB12
PB13/SPI2.SCK
PB14/SPI2.MISO
PB15/SPI2.MOSI
PC0/ADC10
PC1/ADC11
PC2/ADC12
PC3/ADC13
PC4/ADC14
PC5/ADC15
PC6/PWM7
PC7/PWM8
PC8/PWM9/SD.D0
PC9/PWM10/SD.D1
PC10/SD.D2
PC11/SD.D3
PC12/SD.CLK
PC13/LDR1
PC14/OSC32.IN
PC15/OSC32.OUT
PD2/SD.CMD
These pins are VSS on the F401/11 chips
PB6/PWM11/I2C1.SCL
PB7/PWM12/I2C1.SDA
PC0/ADC10
PC1/ADC11
PA13/SWDIO
PA14/SWCLK
PC2/ADC12
PC3/ADC13
PB10/MODE
PB13/SPI2.SCK
PB14/SPI2.MISO
PB15/SPI2.MOSI
PC6/PWM7
PC7/PWM8
PB2
PC4/ADC14
PC5/ADC15
PA15/LDR0
PC13/LDR1
PA0/ADC0/COM2.CTS/PWM3
PA1/ADC1/COM2.RTS/PWM4
PA2/ADC2/COM2.TX/PWM5
PA3/ADC3/COM2.RX/PWM6
PA4/ADC4
PA5/ADC5
PA6/ADC6
PA7/ADC7
PB0/ADC8
PB1/ADC9
PA4/ADC4
PA5/ADC5
PA6/ADC6
PA7/ADC7
PB0/ADC8
PB1/ADC9
PB8/PWM13
PB9/PWM14
PC10/SD.D2
PC11/SD.D3
PC12/SD.CLK
PC8/PWM9/SD.D0
PC9/PWM10/SD.D1
PB12
VCC
GND
+5V
C1 C2 C3 C4 .1uF
C7 2.2uF
C8 27pF
C9 27pF
C10 22uF
C11 .1uF
C6 10uF
C5 22uF
R3 10K
R4 10K
R5 10K
R6 10K
R7 10K 0402
R8 2.2K
R9 2.2K
R10 15K
R11 33
R12 33
R13 330
R1 330
R2 330
GHI LOGO
GHI Electronics, LLC
FEZ Lemur
FEZ Lemur
7/13/2015 10:47:10 AM
Sheet: 1/2